PSSSB2052
WIRE GRID

Cat. No.

PSSSB2052-WIRE

BARCLAY

Features:

►Fits bottom of PSSSB2052 prep sink
►Rubber Feet Covers Included

Finishes:

SS Stainless Steel

W: 8-¾”
D: 17-⅝”
H: 1”

Drain Hole : 4-¾”

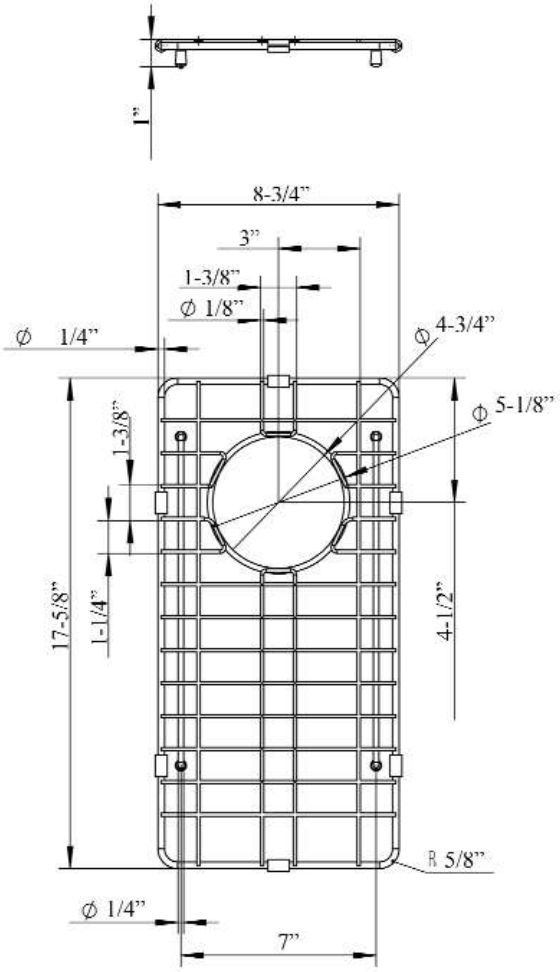

Dimensions and specifications subject to change without notice.